TOWN OF TRUMBULL

MIDDLEBROOK ELEMENTARY SCHOOL
FUEL OIL TANK REPLACEMENT

220 MIDDLEBROOKS AVENUE
TRUMBULL, CONNECTICUT

DATE: 16 JULY 2013 ISSUED FOR BID: 08 APRIL 2014

ANTINOZZI ASSOCIATES
ARCHITECTURE & INTERIORS
271 Fairfield Avenue
Bridgeport, Connecticut 06604
TEL (203) 377-1300 FAX (203) 378-3002

ELECTRICAL & MECHANICAL ENGINEER:
AKF
750 EAST MAIN ST., SUITE 501
STAMFORD, CT 06902
PHONE: (203)323-4333
www.AKFgroup.com

MECHANICAL SYMBOL LIST

(NOT ALL SYMBOLS ARE NECESSARILY USED ON THIS PROJECT)

HVAC PIPING SYMBOLS

- NEW PIPE WITH DIRECTION OF FLOW
- EXISTING PIPING
- EXISTING PIPING/EQUIPMENT TO BE REMOVED
- PIPE DROP
- PIPE RISE
- PITCH UP IN DIRECTION OF FLOW
- PITCH DOWN IN DIRECTION OF FLOW
- UNION
- CONCENTRIC REDUCER
- ECCENTRIC REDUCER – FLAT BOTTOM
- ECCENTRIC REDUCER – FLAT TOP
- FLANGED CONNECTION
- FLANGED END – BLIND FLANGE
- DEAD END – SCREWED CAP
- DEAD END – WELDED CAP
- EXPANSION LOOP
- PIPE EXPANSION JOINT
- BALL JOINT
- PIPE ALIGNMENT GUIDE
- PIPE ANCHOR
- GATE VALVE
- ANGLE GATE VALVE
- GLOBE VALVE
- ANGLE GLOBE VALVE
- NEEDLE VALVE COCK
- DRAIN VALVE
- LOCK SHIELD VALVE
- CHECK VALVE, SWING OR LIFT
- SILENT CHECK (NON–SLAM) VALVE
- FLEXIBLE CONNECTOR
- BUTTERFLY VALVE
- BALL VALVE
- SQUARE HEAD COCK
- BALANCING VALVE
- PLUG VALVE (TYPE AS NOTED)
- AUTOMATIC CONTROL VALVE
- THREE–WAY AUTOMATIC CONTROL VALVE
- FLOW CONTROL VALVE
- QUICK CLOSING VALVE WITH FUSIBLE LINK
- QUICK OPENING VALVE
- DIAPHRAGM VALVE

HVAC PIPING SYMBOLS CONT'D

- S — SOLENOID VALVE
- M — ELECTRIC MOTORIZED VALVE OPERATOR
- THERMOMETER WELL
- THERMOMETER AND WELL
- PRESSURE GAUGE WITH SYPHON
- PUMP
- PSD — PUMP SUCTION DIFFUSER
- S — SEPARATOR
- F — FILTER, IN LINE
- FM — FLOW METER
- FLG — FUEL LEVEL GAUGE
- FOF — FUEL OIL FILL
- FOG — FUEL OIL GAUGE
- FOR — FUEL OIL RETURN
- FOS — FUEL OIL SUPPLY
- FOV — FUEL OIL VENT

HVAC GENERAL SYMBOLS

- POINT OF CONNECTION
- POINT OF DISCONNECTION
- SECTION DESIGNATION
- SHEET NO. WHERE SECTION IS SHOWN
- DETAIL DESIGNATION
- SHEET NO. WHERE SECTION IS SHOWN

ABBREVIATIONS

(NOT ALL ABBREVIATIONS ARE NECESSARILY USED ON THIS PROJECT)

AF	AFTER FILTER
AFF	ABOVE FINISHED FLOOR
BFP	BOILER FEED PUMP
BHP	BRAKE HORSEPOWER
BTU	BRITISH THERMAL UNIT
BTUH	BTU PER HOUR
°C	DEGREES CENTIGRADE (CELSIUS)
C	CONVERTOR
CAC	CONTROL AIR COMPRESSOR
CCP	CENTRAL CONTROL PANEL
CCW	COUNTER CLOCKWISE
CFFC	CAP FOR FUTURE CONNECTION
COMPR	COMPRESSOR
COND	CONDENSATE
CPA	CONTROL POINT ADJUSTMENT
CV	CONSTANT VOLUME
CW	CLOCKWISE
D	DROP
DBD	DOWN BLAST DISCHARGE
DIAM	DIAMETER
DN	DOWN
DWG	DRAWING
(E)	EXISTING TO REMAIN
EA	EACH
EL	ELEVATION
EQ	EQUAL
(ER)	EXISTING TO BE REMOVED
(ERR)	EXISTING TO BE REMOVED & RELOCATED
EXIST	EXISTING
F	FILTER
°F	DEGREES FAHRENHEIT
FA	FREE AREA (SQ.FT.)
FF	FINAL FILTER
FG	FINISHED GRADE
FIN FL	FINISHED FLOOR
FOP	FUEL OIL PUMP
FOT	FUEL OIL TANK
FPM	FEET PER MINUTE
FPS	FEET PER SECOND
FT	FEET
FV	FACE VELOCITY
G	GAUGE
GAL	GALLON
GPH	GALLONS PER HOUR
GPM	GALLONS PER MINUTE
HR	HOUR
HT	HEIGHT
IN	INCH OR INCHES
IPS	IRON PIPE SIZE
L	LENGTH
LBS	POUNDS
LF, LIN.FT.	LINEAR FEET
LR	LINEAR RETURN
LRA	LOCKED ROTOR AMPS
LV	LOW VELOCITY
MAX	MAXIMUM
MBH	THOUSAND BTU PER HOUR
MCC	MOTOR CONTROL CENTER
MER	MECHANICAL EQUIPMENT ROOM
MHP	MOTOR HORSEPOWER
MIN	MINIMUM
MM	MILLIMETER
MOT	MOTOR
MOV	MOTOR OPERATED VALVE
NC	NORMALLY CLOSED
NIC	NOT IN CONTRACT
N.O.	NORMALLY OPEN
NO.	NUMBER
NTS	NOT TO SCALE
OD	OUTSIDE DIAMETER
OV	OUTLET VELOCITY
P	PUMP
PCC	PRE–COOLING COIL
PD	PRESSURE DROP
PF	PRE–FILTER
PHC	PREHEAT COIL
PRV	PRESSURE REDUCING VALVE
PSI	POUNDS PER SQUARE INCH
PSIA	PSI ABSOLUTE
PSIG	PSI GAUGE
R	RISE
RAD	RADIATION
RCC	RECOOLING COIL
RHC	REHEAT COIL
RM	ROOM
ROT	ROTATION
RPM	REVOLUTIONS PER MINUTE
(RE)	EXISTING TO BE REMOVED AND RETURN TO OWNER
SPEC	SPECIFICATION
SQ.FT.	SQUARE FEET
SS	STAINLESS STEEL
T	THROAT
TEMP	TEMPERATURE
TT	TOP THROAT
TYP	TYPICAL
UON	UNLESS OTHERWISE NOTED
W	WIDTH
W/	WITH
W/O	WITHOUT
WP	WORKING PRESSURE

DRAWING INDEX

DRAWING NO.	DRAWING TITLE
M–100	MECHANICAL COVER SHEET
M–200	MECHANICAL DEMOLITION PLANS
M–300	MECHANICAL NEW WORK PLANS
M–400	MECHANICAL SCHEDULES AND DETAILS
M–500	MECHANICAL SPECIFICATIONS

GENERAL NOTES

1. GENERAL NOTES, SYMBOLS, ABBREVIATIONS, AND DETAILS ARE APPLICABLE TO ALL HVAC/MECHANICAL DRAWINGS.
2. DRAWINGS ARE DIAGRAMMATIC. DETERMINE LOCATIONS OF SYSTEMS AND COMPONENTS IN FIELD. RELOCATE EXISTING WORK THAT INTERFERES WITH WORK OF THIS CONTRACT.
3. COORDINATE THIS WORK WITH THAT OF OTHER TRADES.
4. DIMENSIONS SHOWN ON PLAN ARE HORIZONTAL. DIMENSIONS SHOWN IN ELEVATION ARE VERTICAL, EXCEPT IN WAY OF STRUCTURAL STEEL, DIMENSIONS ARE MEASURED PERPENDICULAR TO FLANGE.
5. NEITHER ACCURACY NOR COMPLETION OF SERVICES AND UTILITY LOCATIONS SHOWN ON DRAWINGS IS GUARANTEED. DETERMINE EXACT LOCATIONS OF EXISTING SERVICES AND UTILITIES IN FIELD, WHETHER OR NOT SHOWN ON DRAWINGS. EXERCISE CAUTION AND IDENTIFY LOCATIONS OF UNMARKED UTILITY LINES AS NECESSARY TO PERFORM WORK OF THIS SECTION.
6. MANUFACTURERS MODEL NUMBERS ARE SPECIFIED SOLELY TO ESTABLISH STANDARDS OF QUALITY FOR PERFORMANCE AND MATERIALS.
7. PRODUCT INSTALLATION SHALL ADHERE TO MANUFACTURERS RECOMMENDATIONS.
8. PROVIDE ACCESS PANELS IN IN ACCORDANCE WITH MANUFACTURERS' RECOMMENDATIONS FOR ALL CONCEALED EQUIPMENT THAT REQUIRES PERIODIC SERVICE.
9. PROVIDE HANGERS, INSERTS, ANCHORS, SUPPLEMENTAL STEEL & SUPPORTS AS REQUIRED TO SUPPORT DUCTWORK, PIPING AND EQUIPMENT FROM STRUCTURE.
10. SCHEDULE WORK OF THIS SECTION TO AVOID INTERFERING WITH EXISTING OPERATIONS IN THE FACILITY.
11. RUN DUCTS AND PIPING CONCEALED, UNLESS OTHERWISE SPECIFIED, AND CLEAR OF CEILING INSERTS.
12. PROVIDE 36" CLEARANCE IN FRONT OF ALL ELECTRIC CONTROL PANELS PER N.E.C. AND EQUIPMENT MANUFACTURERS' REQUIREMENTS.
13. STRUCTURAL WELDING SHALL BE CONTINUOUS 1/4" FILLET UNLESS REQUIRED OTHERWISE.
14. ALL MOTOR STARTERS FOR HVAC EQUIPMENT SHALL BE FURNISHED BY THE MECHANICAL CONTRACTOR AND INSTALLED/WIRED BY THE ELECTRICAL CONTRACTOR, UNLESS OTHERWISE NOTED.
15. ALL DISCONNECT SWITCHES FOR HVAC EQUIPMENT SHALL BE FURNISHED, INSTALLED, AND WIRED BY THE ELECTRICAL CONTRACTOR, UNLESS OTHERWISE NOTED.
16. THE PERMANENT HVAC AIR EQUIPMENT SHALL NOT BE USED BY ANY CONTRACTOR DURING CONSTRUCTION FOR TEMPORARY HEATING, COOLING, OR VENTILATION. IF TEMPORARY HEATING, COOLING, OR VENTILATION IS REQUIRED AT ANY POINT DURING CONSTRUCTION, THE CONTRACTOR SHALL PROVIDE TEMPORARY HEATING, COOLING, OR VENTILATION EQUIPMENT, DUCTWORK, CONTROLS, PIPING, AND POWER AT HIS OWN EXPENSE.
17. DURING CONSTRUCTION, THE OWNER'S PERMANENT HVAC AIR EQUIPMENT SHALL BE PROTECTED FROM DUST AND DEBRIS. COVER ALL OPENINGS WITH HEAVY POLYETHYLENE PLASTIC AND TAPE AIR TIGHT. WHEN GENERAL CONSTRUCTION IS COMPLETE, VACUUM CLEAN INSIDE OF UNITS AND REMOVE ANY CONSTRUCTION DEBRIS.
18. PORTIONS OF THE AREAS TO BE RETROFITTED WERE NOT ACCESSIBLE AND/OR NOT DEMOLISHED UNTIL AFTER THE DESIGN PERIOD. WITHOUT THE SPACE BEING COMPLETELY ACCESSIBLE AND/OR DEMOLISHED DURING THE DESIGN PERIOD, WE WERE NOT BE ABLE TO SURVEY THE EXTENT OF THE EXISTING CONDITIONS AND ALL OF THE SERVICES AND CONDITIONS THAT MAY EXIST FOR CONFLICTS WITH THE INTENDED PROGRAM. THERE MAY BE COORDINATION ITEMS THAT WILL NEED TO BE ADDRESSED AFTER DEMOLITION DURING THE CONSTRUCTION PERIOD. IT SHOULD BE NOTED THAT A FINAL REVIEW AND COORDINATION WILL BE REQUIRED AFTER DEMOLITION TO VERIFY ALL FIELD CONDITIONS WITH THE DESIGN DOCUMENTS. THIS MAY RESULT IN CONSTRUCTION COST CHANGES.

PIPING SYSTEMS

19. PITCH PIPING 1" IN 20' IN DIRECTION OF FLOW.

DEMOLITION NOTES

1. GENERAL
   - A. THIS CONTRACTOR SHALL VISIT THE SITE AND ADJOINING AREAS AND EXAMINE THE EXISTING CONDITIONS TO BECOME FAMILIAR WITH THEM AND TO DETERMINE THE DIFFICULTIES WHICH WILL AFFECT THE EXECUTION OF THE WORK OF THIS CONTRACT. THIS CONTRACTOR SHALL PERFORM THIS PRIOR TO THE SUBMISSION OF HIS OR HER PROPOSAL. SUBMISSION OF A PROPOSAL WILL BE CONSTRUED AS EVIDENCE THAT SUCH AN EXAMINATION HAS BEEN MADE AND LATER CLAIMS WILL NOT BE RECOGNIZED FOR EXTRA LABOR, EQUIPMENT OR MATERIALS REQUIRED BECAUSE OF DIFFICULTIES ENCOUNTERED WHICH COULD HAVE BEEN FORESEEN HAD SUCH AN EXAMINATION BEEN MADE.
   - B. THE DEMOLITION WORK SHALL INCLUDE, PROVIDING ALL MATERIALS, ALL NECESSARY EXTENSIONS, CONNECTIONS, CUTTING, REPAIRING, ADAPTING AND OTHER MECHANICAL WORK REQUIRED, TOGETHER WITH ANY REQUIRED TEMPORARY CONNECTIONS TO MAINTAIN SERVICE PENDING THE COMPLETION OF THE PERMANENT WORK. NOTES AND GRAPHIC REPRESENTATION SHALL NOT LIMIT THE EXTENT OF DEMOLITION REQUIRED. EXTENT OF DEMOLITION WORK SHALL BE COORDINATED WITH THE ARCHITECT AND BUILDING MANAGEMENT.
2. SCOPE OF WORK
   - A. ALL EXISTING WORK REQUIRED TO REMAIN BUT INTERFERING WITH PROPOSED NEW MECHANICAL (AS WELL AS ELECTRICAL AND GENERAL CONSTRUCTION WORK) SHALL BE RELOCATED AND RECONNECTED USING MATERIALS CONFORMING TO STANDARDS OF THIS CONTRACT.
   - B. FOR EXISTING EQUIPMENT TO BE REMOVED, REMOVE ALL STARTERS, DISCONNECT SWITCHES, MOTORS, CONTROL (BOTH TEMPERATURE AND SYSTEM CONTROL) BACK TO MAIN PANELS AND CAP AT PANEL. COORDINATE WITH ELECTRICAL CONTRACTOR BEFORE REMOVAL OF ANY ELECTRICAL POWERED EQUIPMENT. ELECTRICAL CONTRACTOR IS TO DISCONNECT ALL POWER TO SUCH EQUIPMENT. REMOVE ALL ASSOCIATED BRANCH PIPING AND BRANCH DUCTWORK BACK TO MAINS OR AS SHOWN ON PLAN.
   - C. CONTRACTOR TO REPLACE/PATCH WALLS AND FLOORS TO MATCH EXISTING.
   - D. PROVIDE ADDITIONAL SUPPORT FOR ALL EXISTING DUCTS AND PIPING TO REMAIN WHICH ARE AFFECTED BY DEMOLITION OF EXISTING CEILING AND PARTITIONS.
   - E. EQUIPMENT REQUIRED TO BE TURNED OVER TO THE OWNER SHALL BE PLACED IN A MUTUALLY ACCEPTABLE LOCATION. ALL MATERIALS AND EQUIPMENT REMOVED AS A RESULT OF DEMOLITION SHALL BE TAKEN FROM THE SITE AND DISPOSED OF IN ACCORDANCE WITH APPLICABLE LAWS AND ENVIRONMENTAL REGULATIONS.
   - F. CONTRACTOR SHALL IDENTIFY ALL EXISTING WORK TO REMAIN BY ACCEPTABLE IDENTIFICATION MEANS TO CONFIRM PROPER SCOPE PRIOR TO COMMENCEMENT OF DEMOLITION.

PRICING ALTERNATES

1. PRICING ALTERNATE #M1: REMOVE THE EXISTING FUEL OIL PUMP AND ELECTRIC OIL HEATER. PROVIDE A NEW PACKAGED SKID–MOUNTED DUPLEX FUEL OIL PUMP SET WITH MANUFACTURER SUPPLIED CONTROLS.
2. PRICING ALTERNATE #M2: PROVIDE A NEW 6,000 GALLON BURIED FUEL OIL TANK, INSTEAD OF A NEW 15,000 GALLON BURIED FUEL OIL TANK AS SPECIFIED UNDER BASE BID SCOPE.
3. PRICING ALTERNATE #M3: PROVIDE A NEW 3,000 GALLON OUTDOOR ABOVE–GROUND FUEL OIL TANK, INSTEAD OF A NEW 15,000 GALLON BURIED FUEL OIL TANK AS SPECIFIED UNDER BASE BID SCOPE.
4. PRICING ALTERNATE #M4: DO NOT PROVIDE A NEW FUEL TANK, PIPING, OR FILL/LEAK/LEVEL CONTROLS. JUST REMOVE THE EXISTING TANK, PIPING, AND FILL/LEAK/LEVEL CONTROLS AND PROVIDE RESTORATIVE WORK (BACKFILL, GRADING, TOPSOIL, SEEDING, ETC.), AS INDICATED ON DRAWING M–200.

UNIT PRICING

1. UNIT PRICE #M1: PROVIDE A UNIT PRICE ($/TON) TO EXCAVATE, REMOVE, AND DISPOSE OF CONTAMINATED SOIL IN ACCORDANCE WITH ALL STATE, LOCAL, AND FEDERAL LAWS AND CODES. THIS UNIT PRICE SHALL ALSO INCLUDE PROVIDING CLEAN BACKFILL TO REPLACE THE SOIL WHICH WAS REMOVED.

AKF
750 East Main Street, Suite 501
Stamford, CT 06902
T: 203.323.4333 F: 203.323.2999
ARLINGTON / BOSTON / MEXICO CITY / MINNEAPOLIS / NEW YORK
PHILADELPHIA / PRINCETON / ROCHESTER / STAMFORD
ENGINEERING / ANALYSIS & TESTING / BUILDING MANAGEMENT SYSTEMS / CONTROL SYSTEMS
CODE CONSULTING / COMMISSIONING / DIGITAL SYSTEMS / ENERGY & SUSTAINABILITY
FIRE PROTECTION / IS/IAQ SECURITY / SEISMIC DESIGN / SPECIALIZED INSPECTIONS
www.AKFGroup.com

ANTINOZZI ASSOCIATES
ARCHITECTURE & INTERIORS

OWNER

Trumbull Public Schools
6254 Main Street
Trumbull, CT 06611

No.	Date	Description
4	04/08/2014	ISSUED FOR BID
3	03/07/2014	ISSUED FOR BID
2	09/13/2013	ISSUED FOR BID
1	07/16/2013	ISSUED FOR REVIEW

ISSUE

PROJECT

Fuel Oil Tank Replacement
Middlebrook Elementary School
220 Middlebrooks Ave.
Trumbull, CT 06611

DRAWING TITLE

MECHANICAL COVER SHEET

Drawn By	JR
Checked By	JM
Date	07/16/2013
Scale	N.T.S.
Project No.	S130020–000
Drawing No.	M-100

SAVE DATE: 4/8/2014 10:59 AM
PLOT DATE: 4/8/2014 11:01 AM
LOGIN: Reiss, Jeremy
P:_Projects\S130000\S130020-000\Drawings\Mech\S130020-000 - M-100.dwg

PRICE THIS WORK AS PRICING ALTERNATE #M1

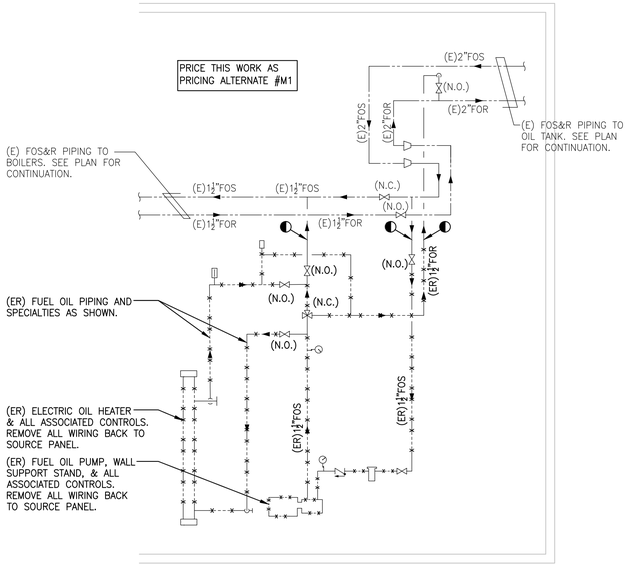

1 BOILER ROOM PARTIAL ELEVATION
PRICING ALTERNATE #M1 DEMOLITION
SCALE: N.T.S.

SITE WORK NOTES:
1. CONTRACTOR SHALL HAVE ALL UNDERGROUND UTILITIES MARKED BY "CALL BEFORE YOU DIG" PRIOR TO THE START OF ANY WORK.
2. WORK AREA TO BE MAINTAINED SO AS NOT TO PREVENT ACCESS TO LOADING DOCK.
3. PROVIDE ALL NECESSARY SHORING OF EXCAVATION AND MAKE SAFE AT ALL TIMES.
4. PROVIDE DEWATERING OF EXCAVATION AS NECESSARY.
5. DURING EXISTING TANK REMOVAL, CONTRACTOR SHALL BE RESPONSIBLE FOR SOIL TESTING AND FILING WITH STATE AND LOCAL AGENCIES.
6. SHOULD SOIL REMOVAL BE REQUIRED, COORDINATE LOCATION OF CONTAINERS WITH OWNER.
7. PROVIDE RESTORATION OF DISTURBED AREAS TO ORIGINAL CONDITION INCLUDING PAVING AND CURBING, LANDSCAPING, GRADING, TOPSOIL, AND SEEDING OF LAWN AREAS.

LOCATIONS OF BURIED HVAC EQUIPMENT AND PIPING SHOWN ON THIS PLAN ARE APPROXIMATE ONLY, BASED ON VISIBLE ITEM LOCATIONS.

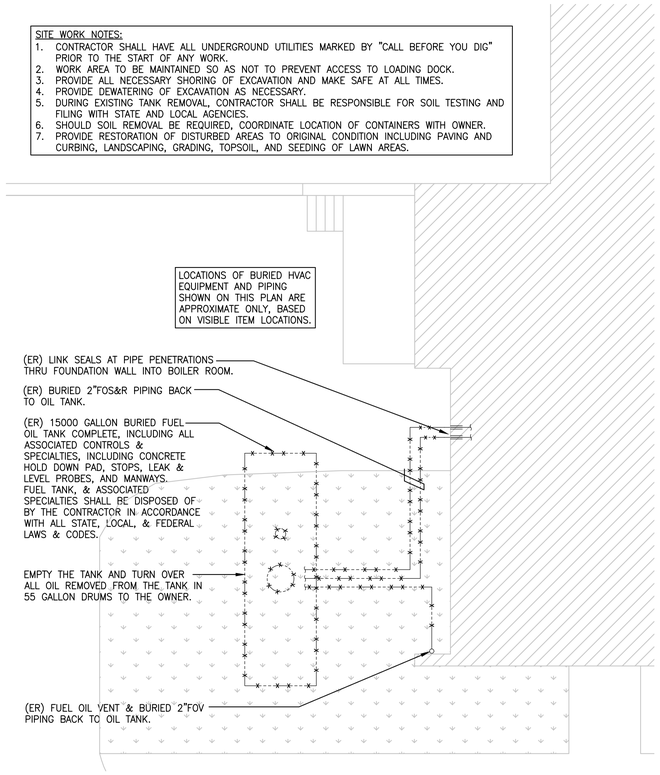

2 SITE PART PLAN – DEMOLITION
SCALE: 1/8"=1'-0"

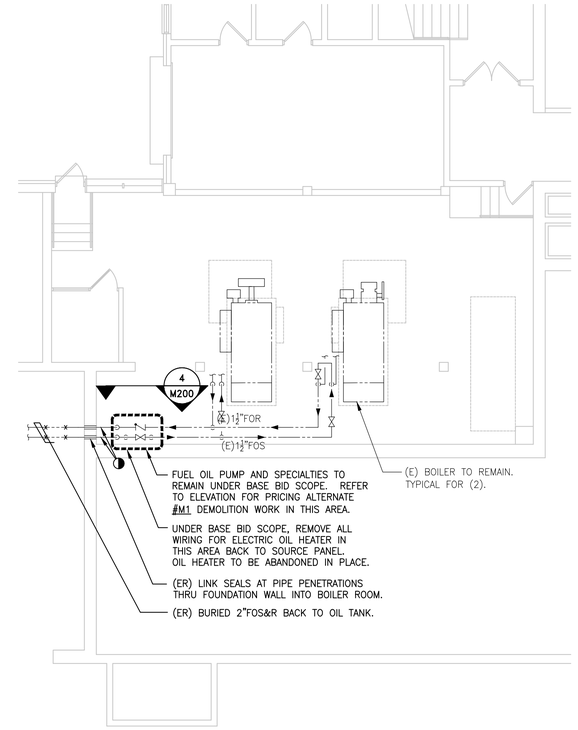

3 BOILER ROOM DEMOLITION PART PLAN
SCALE: 1/8"=1'-0"

AKF
750 East Main Street, Suite 501
Stamford, CT 06902
T: 203.323.4333 F: 203.323.2999
ARLINGTON / BOSTON / MEXICO CITY / MINNEAPOLIS / NEW YORK
PHILADELPHIA / PRINCETON / ROCHESTER / STAMFORD
ENGINEERING / ANALYSIS & TESTING / BUILDING MANAGEMENT SYSTEMS / CENTRAL UTILITIES
CODE CONSULTING / COMMISSIONING / DIGITAL SYSTEMS / ENERGY & SUSTAINABILITY
FIRE PROTECTION / IS/AV/SECURITY / LIGHTING DESIGN / SPECIALIZED DESIGNS
www.AKGroup.com

ANTINOZZI ASSOCIATES
ARCHITECTURE & INTERIORS

OWNER
Trumbull Public Schools
6254 Main Street
Trumbull, CT 06611

No.	Date	Description
4	04/08/2014	ISSUED FOR BID
3	03/07/2014	ISSUED FOR BID
2	09/13/2013	ISSUED FOR BID
1	07/16/2013	ISSUED FOR REVIEW

ISSUE

PROJECT
Fuel Oil Tank Replacement
Middlebrook Elementary School
220 Middlebrooks Ave.
Trumbull, CT 06611

DRAWING TITLE
MECHANICAL
DEMOLITION PLANS

Drawn By	JR
Checked By	JM
Date	07/16/2013
Scale	AS NOTED
Project No.	S130020-000

Drawing No.
M-200

SAVE DATE: 4/8/2014 10:18 AM
PLOT DATE: 4/8/2014 11:01 AM
LOGIN: Reiss, Jeremy
P:_Projects\S130000\S130020-000\Drawings\Mech\S130020-000 - M-200.dwg

SITE WORK NOTES:
1. CONTRACTOR SHALL HAVE ALL UNDERGROUND UTILITIES MARKED BY "CALL BEFORE YOU DIG" PRIOR TO THE START OF ANY WORK.
2. WORK AREA TO BE MAINTAINED SO AS NOT TO PREVENT ACCESS TO LOADING DOCK.
3. PROVIDE ALL NECESSARY SHORING OF EXCAVATION AND MAKE SAFE AT ALL TIMES.
4. PROVIDE DEWATERING OF EXCAVATION AS NECESSARY.
5. DURING EXISTING TANK REMOVAL, CONTRACTOR SHALL BE RESPONSIBLE FOR SOIL TESTING AND FILING WITH STATE AND LOCAL AGENCIES.
6. SHOULD SOIL REMOVAL BE REQUIRED, COORDINATE LOCATION OF CONTAINERS WITH OWNER.
7. PROVIDE RESTORATION OF DISTURBED AREAS TO ORIGINAL CONDITION INCLUDING PAVING AND CURBING, LANDSCAPING, GRADING, TOPSOIL, AND SEEDING OF LAWN AREAS.

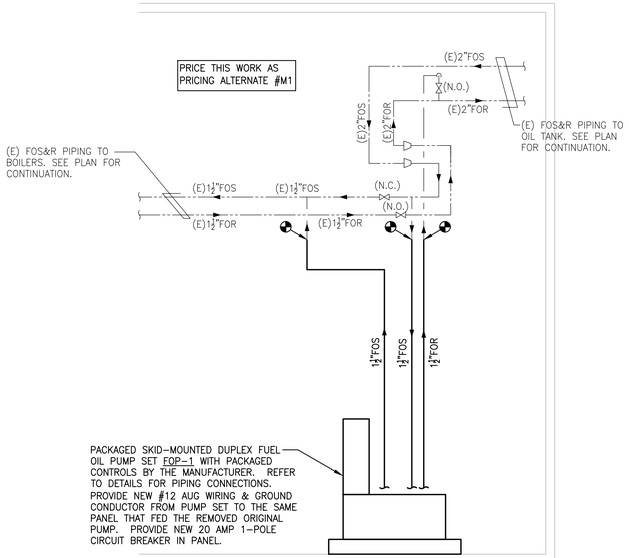

1 BOILER ROOM PARTIAL ELEVATION
PRICING ALTERNATE #M1 NEW WORK
SCALE: N.T.S.

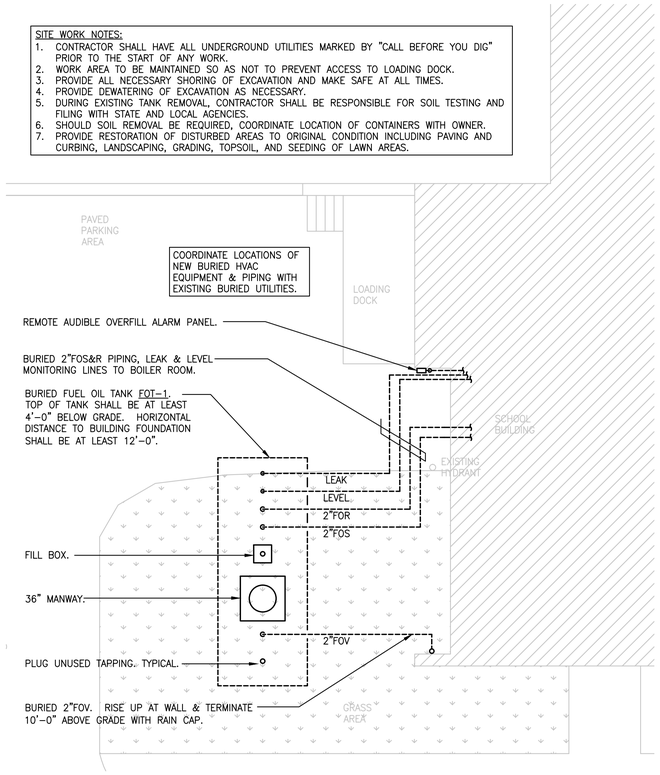

2 SITE PART PLAN - NEW WORK
SCALE: 1/8"=1'-0"

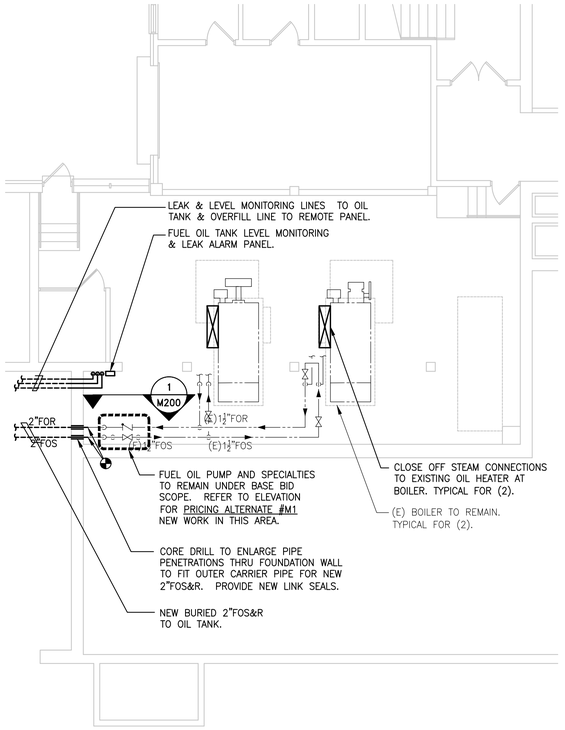

3 BOILER ROOM NEW WORK PART PLAN
SCALE: 1/8"=1'-0"

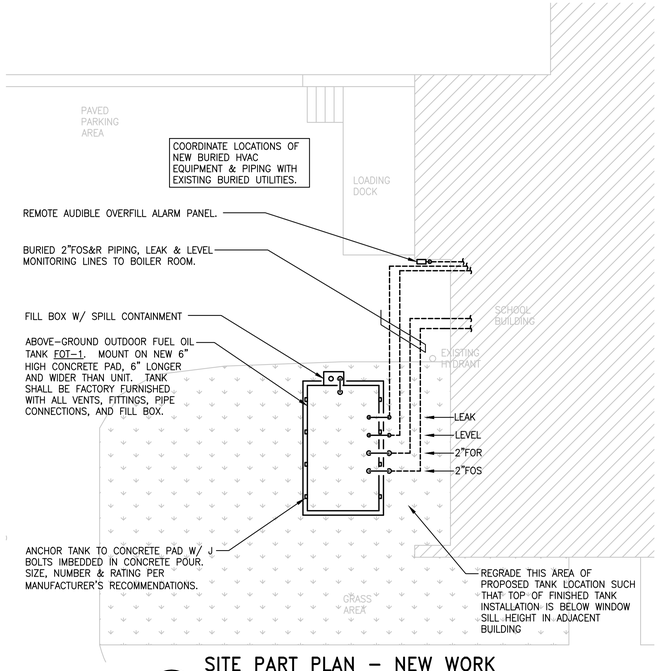

4 SITE PART PLAN - NEW WORK
PRICING ALTERNATE #M3
SCALE: 1/8"=1'-0"

AKF
750 East Main Street, Suite 501
Stamford, CT 06902
T: 203.323.4333 F: 203.323.2999
ARLINGTON / BOSTON / MEXICO CITY / MINNEAPOLIS / NEW YORK
PHILADELPHIA / PRINCETON / ROCHESTER / STAMFORD
ENGINEERING / ANALYSIS & TESTING / BUILDING MANAGEMENT SYSTEMS / CENTRAL UTILITIES
CODE CONSULTING / COMMISSIONING / DIGITAL SYSTEMS / ENERGY & SUSTAINABILITY
FIRE PROTECTION / ELAVS / SECURITY / LIGHTING DESIGN / SPECIALIZED DESIGNS
www.AKFGroup.com

ANTINOZZI ASSOCIATES
ARCHITECTURE & INTERIORS

OWNER
Trumbull Public Schools
6254 Main Street
Trumbull, CT 06611

No.	Date	Description
4	04/08/2014	ISSUED FOR BID
3	03/07/2014	ISSUED FOR BID
2	09/13/2013	ISSUED FOR BID
1	07/16/2013	ISSUED FOR REVIEW

ISSUE

PROJECT
Fuel Oil Tank Replacement
Middlebrook Elementary School
220 Middlebrooks Ave.
Trumbull, CT 06611

DRAWING TITLE
MECHANICAL
NEW WORK PLANS

Drawn By	JR
Checked By	JM
Date	07/16/2013
Scale	AS NOTED
Project No.	S130020-000

Drawing No.
M-300

P:_Projects\S130000\S130020-000\Drawings\Mech\S130020-000 - M-300.dwg
LOGIN: Reiss, Jeremy
PLOT DATE: 4/8/2014 11:01 AM
SAVE DATE: 4/8/2014 9:59 AM

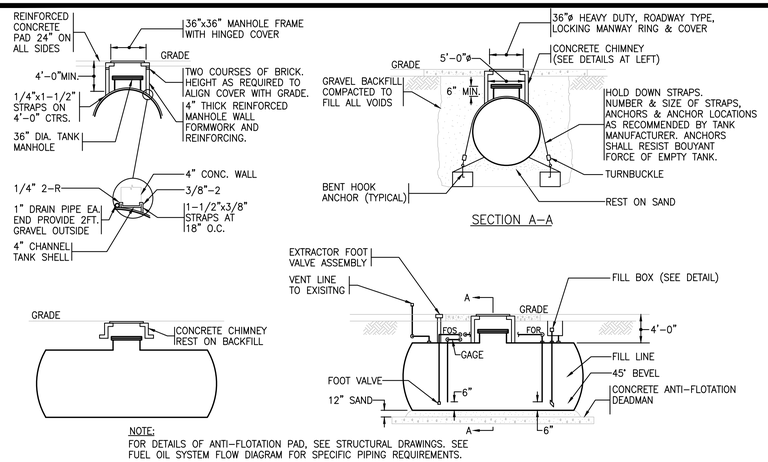

NOTE:
FOR DETAILS OF ANTI-FLOTATION PAD, SEE STRUCTURAL DRAWINGS. SEE FUEL OIL SYSTEM FLOW DIAGRAM FOR SPECIFIC PIPING REQUIREMENTS.

1 / M300 UNDERGROUND STEEL FUEL OIL STORAGE TANK

DUPLEX FUEL OIL PUMP SCHEDULE

UNIT No.	LOCATION	SERVICE	MAX. OIL TEMP. (°F)	GPH (EACH)	DISC. PRESSURE (PSIG)	RPM	MOTOR HP (EACH)	ELECTRICAL DATA VOLTS	PHASE	HZ	MANUF.	MODEL #	REMARKS
FOP-1 (PRICING ALTERNATE #1)	BOILER RM	NO.2 OIL	100	222	25	1750	1/4	120	1	60	POWERFLAME	DPS-3-25	SEE NOTES BELOW

NOTES:
1. INCLUDE THE FOLLOWING COMPONENTS: RELIEF AND CHECK VALVES ON EACH PUMP, FUEL OIL STRAINER, SUCTION AND STRAINER ISOLATION BALL VALVES, SET MOUNTED CONTROL PANEL WITH MOTOR CONTACTORS, H-O-A SWITCH, PUMP SELECTOR SWITCH, AND INDICATOR LIGHTS.

BURIED DOUBLE-WALL FUEL OIL STORAGE TANK SCHEDULE

UNIT No.	LOCATION	TYPE	MATERIAL OUTER WALL	INNER WALL	CAPACITY (GAL.)	DIA. (FT.-IN.)	LENGTH (FT.-IN.)	MANHOLES DIAMETER (IN.)	MAX. OIL TEMP. (°F)	TANK MANUF.	MODEL #	REMARKS
FOT-1 (BASE BID SCOPE)	RE: PLAN	BURIED	POLYMER	STEEL	15,000	10'-0"	25'-6"	36	100	HIGHLAND TANK	TITAN	UL-1746
FOT-1 (PRICING ALTERNATE #2)	RE: PLAN	BURIED	POLYMER	STEEL	6,000	8'-0"	16'-0"	36	100	HIGHLAND TANK	TITAN	UL-1746

OUTDOOR ABOVE-GROUND DOUBLE-WALL FIRE-RATED FUEL OIL STORAGE TANK SCHEDULE

UNIT No.	LOCATION	TYPE	MATERIAL OUTER WALL	INTERSTITIAL SPACE	INNER WALL	CAPACITY (GAL.)	LENGTH (FT.-IN.)	WIDTH (FT.-IN.)	HEIGHT (FT.-IN.)	MANHOLES DIAMETER (IN.)	MAX. OIL TEMP. (°F)	TANK MANUF.	MODEL #	REMARKS
FOT-1 (PRICING ALTERNATE #3)	RE: PLAN	OUTDOOR	3/16" STEEL	4"LW CONCRETE	1/4" STEEL	3,000	14'-0"	7'-11"	4'-11"	36	100	CONTAINMENT SOLUTIONS	HOOVER VAULT	UL-2058, UL-142, 2-HR FIRE RATED, FACTORY-MOUNTED REMOTE FILL BOX

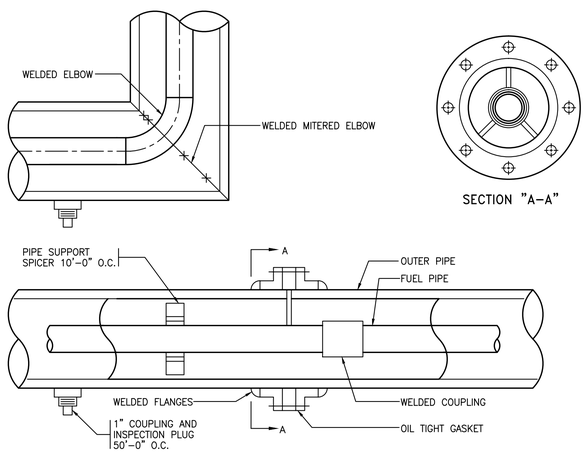

2 / M300 FUEL PIPE DOUBLE WALL CONSTRUCTION

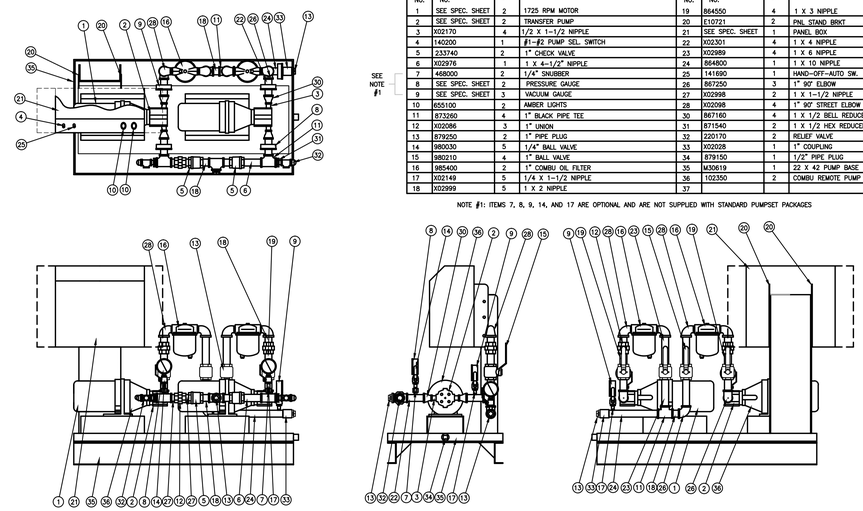

ITEM NO.	PART NO.	QTY	DESCRIPTION	ITEM NO.	PART NO.	QTY	DESCRIPTION
1	SEE SPEC. SHEET	2	1725 RPM MOTOR	19	864550	4	1 X 3 NIPPLE
2	SEE SPEC. SHEET	2	TRANSFER PUMP	20	E10721	2	PNL STAND BRKT
3	X02170	4	1/2 X 1-1/2 NIPPLE	21	SEE SPEC. SHEET	1	PANEL BOX
4	140200	1	#1-#2 PUMP SEL. SWITCH	22	X02301	4	1 X 4 NIPPLE
5	233740	2	1" CHECK VALVE	23	X02989	4	1 X 6 NIPPLE
6	X02976	1	1 X 4-1/2" NIPPLE	24	864800	1	1 X 10 NIPPLE
7	468000	2	1/4" SNUBBER	25	141690	1	HAND-OFF-AUTO SW.
8	SEE SPEC. SHEET	2	PRESSURE GAUGE	26	867250	3	1" 90° ELBOW
9	SEE SPEC. SHEET	3	VACUUM GAUGE	27	X02998	2	1 X 1-1/2 NIPPLE
10	655100	2	AMBER LIGHTS	28	X02098	4	1" 90° STREET ELBOW
11	873260	4	1" BLACK PIPE TEE	30	867160	4	1 X 1/2 BELL REDUCER
12	X02086	3	1" UNION	31	871540	2	1 X 1/2 HEX REDUCER
13	879250	2	1" PIPE PLUG	32	220170	2	RELIEF VALVE
14	980030	5	1/4" BALL VALVE	33	X02028	1	1" COUPLING
15	980210	4	1" BALL VALVE	34	879150	1	1/2" PIPE PLUG
16	985400	2	1" COMBU OIL FILTER	35	M30619	1	22 X 42 PUMP BASE
17	X02149	5	1/4 X 1-1/2 NIPPLE	36	102350	2	COMBU REMOTE PUMP STAND
18	X02999	5	1 X 2 NIPPLE	37			

NOTE #1: ITEMS 7, 8, 9, 14, AND 17 ARE OPTIONAL AND ARE NOT SUPPLIED WITH STANDARD PUMPSET PACKAGES

3 / M300 FUEL OIL PUMP PIPING DETAILS

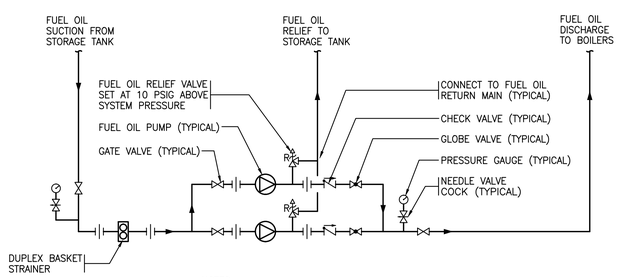

NOTES:
1. PUMP BASES GROUTED TO CONCRETE PAD BASE.
2. FURNISH VIBRATION ISOLATION AS SPECIFIED.
3. MOUNT PUMP SET & FILTER WITHIN 6" HIGH STAINLESS STEEL DRAIN PAN ON 4" HIGH CURB. PAN FILLED WITH 2" HIGH SAND BED.

5 / M300 DUPLEX FUEL OIL PUMP SET PIPING

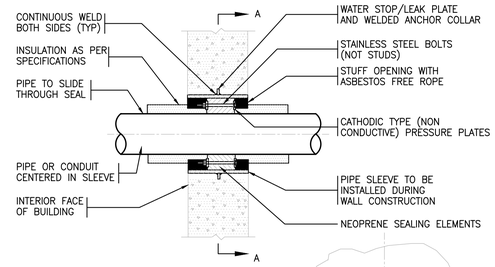

NOTES
1. WHEN SEALING FLOOR PENETRATIONS, EXTEND SLEEVE 3" ABOVE FINISHED FLOOR.
2. WHEN CORE DRILL IS USED THE PIPE SLEEVE AND WATER STOP/LEAK PLATE ARE NOT REQUIRED.

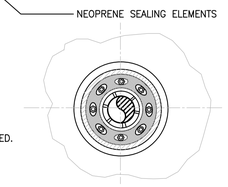

SECTION A-A

6 / M300 MOLDED RUBBER BOLTED SEAL ASSEMBLY

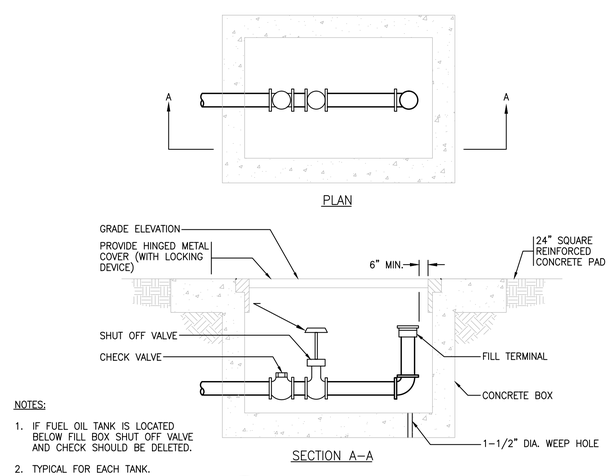

NOTES:
1. IF FUEL OIL TANK IS LOCATED BELOW FILL BOX SHUT OFF VALVE AND CHECK SHOULD BE DELETED.
2. TYPICAL FOR EACH TANK.

4 / M300 FUEL FILL BOX

AKF
750 East Main Street, Suite 501
Stamford, CT 06902
T: 203.323.4333 F: 203.323.2999
ARLINGTON / BOSTON / MEXICO CITY / MINNEAPOLIS / NEW YORK
PHILADELPHIA / PRINCETON / ROCHESTER / STAMFORD
ENGINEERING / ANALYSIS & TESTING / BUILDING MANAGEMENT SYSTEMS / CONTROL SYSTEMS
CODE CONSULTING / COMMISSIONING / DIGITAL SYSTEMS / ENERGY & SUSTAINABILITY
FIRE PROTECTION / ELAVS/SECURITY / ASHRAE DESIGN / SPECIALIZED INSPECTIONS
www.AKGroup.com

ANTINOZZI ASSOCIATES
ARCHITECTURE & INTERIORS

OWNER
Trumbull Public Schools
6254 Main Street
Trumbull, CT 06611

No.	Date	Description
4	04/08/2014	ISSUED FOR BID
3	03/07/2014	ISSUED FOR BID
2	09/13/2013	ISSUED FOR BID
1	07/16/2013	ISSUED FOR REVIEW

ISSUE

PROJECT
Fuel Oil Tank Replacement
Middlebrook Elementary School
220 Middlebrooks Ave.
Trumbull, CT 06611

DRAWING TITLE
MECHANICAL SCHEDULES AND DETAILS

Drawn By	JR
Checked By	JM
Date	07/16/2013
Scale	N.T.S.
Project No.	S130020-000
Drawing No.	M-400

SAVE DATE: 4/8/2014 9:59 AM
PLOT DATE: 4/8/2014 11:02 AM
LOGIN: Reiss, Jeremy
P:_Projects\S130000\S130020-000\Drawings\Mech\S130020-000 - M-400.dwg

HVAC SPECIFICATION

1. GENERAL

A. THE "GENERAL CONDITIONS OF THE CONTRACT FOR CONSTRUCTION," AIA DOCUMENT A201, LATEST EDITION, AND THESE SPECIFICATIONS AS APPLICABLE ARE PART OF THIS CONTRACT.

B. ALL APPLICABLE CODES, LAWS AND REGULATIONS GOVERNING OR RELATING TO ANY PORTION OF THIS WORK ARE HEREBY INCORPORATED INTO AND MADE A PART OF THESE SPECIFICATIONS, AND THEIR PROVISIONS SHALL BE CARRIED OUT BY THE CONTRACTOR WHO SHALL INFORM THE OWNER, PRIOR TO SUBMITTING A PROPOSAL, OF ANY WORK OR MATERIALS WHICH VIOLATE ANY OF THE ABOVE LAWS AND REGULATIONS. ANY WORK DONE BY THE CONTRACTOR CAUSING SUCH VIOLATION SHALL BE CORRECTED BY THE CONTRACTOR.

C. INVESTIGATE EACH SPACE THROUGH WITH EQUIPMENT MUST BE MOVED. WHERE NECESSARY, EQUIPMENT SHALL BE SHIPPED FROM MANUFACTURER IN SECTIONS OF SIZE SUITABLE FOR MOVING THROUGH AVAILABLE RESTRICTIVE SPACES. ASCERTAIN FROM BUILDING OWNER AT WHAT TIMES OF DAY EQUIPMENT MAY BE MOVED THROUGH ALL AREAS.

D. DUCTWORK AND PIPING IS SHOWN DIAGRAMMATICALLY AND DOES NOT SHOW ALL OFFSETS, DROPS AND RISES OF RUNS. THE CONTRACTOR SHALL ALLOW IN HIS PRICE FOR ROUTING OF DUCTWORK AND PIPING TO AVOID OBSTRUCTIONS. EXACT LOCATIONS ARE SUBJECT TO APPROVAL OF ARCHITECT. COORDINATION WITH THE EXISTING SERVICES, INCLUDING THOSE OF OTHER TRADES IS REQUIRED.

E. SUPPORT ALL DUCTWORK AND PIPING FROM BUILDING STRUCTURE AND/OR FRAMING IN AN APPROVED MANNER. WHERE OVERHEAD CONSTRUCTION DOES NOT PERMIT FASTENING OR SUPPORTS FOR EQUIPMENT, FURNISH ADDITIONAL FRAMING. INSERTS SHALL BE STEEL, SLOTTED TYPE AND FACTORY PAINTED. SINGLE ROD SHALL BE SIMILAR TO GRINNELL FIG. 281. MULTI-ROD SHALL BE SIMILAR TO FEE & MASON SERIES 9000 WITH END CAPS AND CLOSURE STRIPS. MAXIMUM LOADING INCLUDING PIPES, DUCTWORK CONTENTS AND COVERING SHALL NOT EXCEED 75% OF RATED INSERT CAPABILITY. WHEN SUPPORTING FROM BUILDING USE BEAM CLAMPS IN APPROVED MANNER.

F. INSTALL WORK SO AS TO BE READILY ACCESSIBLE FOR OPERATION, MAINTENANCE AND REPAIR. MINOR DEVIATIONS FROM DRAWINGS MAY BE MADE TO ACCOMPLISH THIS, BUT CHANGES WHICH INVOLVE EXTRA COST SHALL NOT BE MADE WITHOUT APPROVAL.

G. REMOVAL AND RELOCATION OF CERTAIN EXISTING WORK WILL BE NECESSARY FOR THE PERFORMANCE OF THE GENERAL WORK. ALL EXISTING CONDITIONS CANNOT BE COMPLETELY DETAILED ON THE DRAWINGS. THE CONTRACTOR SHALL SURVEY THE SITE AND INCLUDE ALL CHANGES IN MAKING UP THE WORK PROPOSAL.

H. PLAN INSTALLATION OF NEW WORK AND CONNECTIONS TO EXISTING WORK TO ENSURE MINIMUM INTERFERENCE WITH REGULAR OPERATION OF EXISTING FACILITIES. ALL SYSTEM SHUTDOWNS AFFECTING OTHER AREAS SHALL BE COORDINATED WITH BUILDING OWNER. BOILER AND HEATING SYSTEM SHALL BE KEPT IN OPERATION DURING THE HEATING SEASON.

I. CONNECT NEW WORK TO EXISTING WORK IN NEAT AND APPROVED MANNER. RESTORE EXISTING WORK DISTURBED WHILE INSTALLING NEW WORK TO ACCEPTABLE CONDITION AS DETERMINED BY ARCHITECT.

J. DISCONNECT, REMOVE AND/OR RELOCATE EXISTING MATERIAL, EQUIPMENT AND OTHER WORK AS NOTED OR REQUIRED FOR PROPER INSTALLATION OF NEW SYSTEM.

K. THE CONTRACTOR SHALL KEEP ALL EQUIPMENT AND MATERIALS, AND ALL PARTS OF THE BUILDING, EXTERIOR SPACES AND ADJACENT STREETS, SIDEWALKS AND PAVEMENTS, FREE FROM MATERIAL AND DEBRIS RESULTING FROM THE EXECUTION OF THIS WORK. EXCESS MATERIALS WILL NOT BE PERMITTED TO ACCUMULATE EITHER ON THE INTERIOR OR THE EXTERIOR. SITE SHALL BE CLEANED DAILY.

L. SEAL OPENINGS AROUND DUCTS AND PIPING THROUGH PARTITIONS, WALLS AND FLOORS (NOT IN SHAFTS) WITH MINERAL WOOL OR OTHER NONCOMBUSTIBLE MATERIAL.

M. PROVIDE ALL NECESSARY FLASHING AND COUNTERFLASHING TO MAINTAIN THE WATERPROOFING INTEGRITY OF THIS BUILDING AS REQUIRED BY THE INSTALLATION OR REMOVAL OF PIPES, DUCTS, LOUVERS, CONDUIT, AND EQUIPMENT. PROVIDE EQUIPMENT CURBS AND DUNNAGE STEEL AS REQUIRED.

N. ALL PRESENT MATERIAL, EQUIPMENT AND CONSTRUCTION DEBRIS TO BE REMOVED UNDER THIS CONTRACT SHALL BECOME THE PROPERTY OF THE CONTRACTOR WITH THE EXCEPTION OF SPECIFIC EQUIPMENT AND APPARATUS REQUESTED BY THE BUILDING REPRESENTATIVE, OR AS NOTED TO BE RELOCATED ON THE DRAWINGS SHALL BE PROPERLY DISPOSED OF BY THIS CONTRACTOR.

O. THE WORK IN THE BUILDING SHALL BE DONE WHEN AND AS DIRECTED, AND IN A MANNER SATISFACTORY TO THE OWNER. THE WORK SHALL BE PERFORMED SO AS TO CAUSE THE LEAST POSSIBLE INCONVENIENCE AND DISTURBANCE TO THE PRESENT OCCUPANTS.

P. THE CONTRACTOR'S PROPOSAL FOR ALL WORK SHALL BE PREDICATED ON THE PERFORMANCE OF THE WORK DURING REGULAR WORKING HOURS. WHEN SO DIRECTED, HOWEVER, THE CONTRACTOR SHALL INSTALL WORK IN OVERTIME AND THE ADDITIONAL COST TO BE CHARGED THEREFORE SHALL BE ONLY THE "PREMIUM" PORTION OF THE WAGES PAID.

Q. UNLESS OTHERWISE SPECIFICALLY SPECIFIED, INCLUDE ALL CUTTING AND PATCHING OF EXISTING FLOORS, WALLS, PARTITIONS AND OTHER MATERIALS IN THE EXISTING BUILDING. THE CONTRACTOR SHALL RESTORE THESE AREAS TO ORIGINAL CONDITION.

R. ALL MATERIAL AND EQUIPMENT TO BE NEW UNLESS OTHERWISE NOTED AND SHALL BE IN ACCORDANCE WITH BUILDING STANDARDS.

S. SUBMISSION OF A PROPOSAL SHALL BE CONSTRUED AS EVIDENCE THAT A CAREFUL EXAMINATION OF THE PORTIONS OF THE EXISTING BUILDING, EQUIPMENT, ETC., WHICH AFFECT THIS WORK, AND THE ACCESS TO SUCH SPACES, HAS BEEN MADE AND THAT THE CONTRACTOR IS FAMILIAR WITH EXISTING CONDITIONS AND DIFFICULTIES THAT WILL AFFECT THE EXECUTION OF THE WORK. LATER CLAIMS SHALL NOT BE MADE FOR LABOR, EQUIPMENT OR MATERIALS REQUIRED BECAUSE OF DIFFICULTIES ENCOUNTERED WHICH COULD HAVE BEEN FORESEEN DURING SUCH AN EXAMINATION. THE ON-SITE INSPECTION SHALL VERIFY EXISTING DUCTWORK, PIPING (SIZES, CLEARANCES, ETC.) AND CONDITIONS.

T. INSURANCE: IN ACCORDANCE WITH BUILDING REQUIREMENTS AND SHALL INCLUDE A HOLD HARMLESS CLAUSE FOR OWNER AND ENGINEER.

U. THE FINAL ACCEPTANCE WILL BE MADE AFTER THE CONTRACTOR HAS ADJUSTED HIS EQUIPMENT, BALANCED THE VARIOUS SYSTEMS, DEMONSTRATED THAT IT FULFILLS THE REQUIREMENTS OF THE DRAWINGS AND SPECIFICATIONS AND HAS FURNISHED ALL THE REQUIRED CERTIFICATES OF INSPECTION AND APPROVAL.

V. GUARANTEE:

1) ALL MATERIALS AND WORKMANSHIP SHALL BE GUARANTEED FOR A PERIOD OF ONE YEAR FROM DATE OF FINAL ACCEPTANCE OF THIS WORK. FINAL ACCEPTANCE SHALL BE DEFINED AS THE TIME AT WHICH THE MECHANICAL WORK IS TAKEN OVER AND ACCEPTED BY THE OWNER, AND IS UNDER CARE, CUSTODY, AND CONTROL OF THE OWNER. ENGAGE THE SERVICES OF VARIOUS MANUFACTURERS SUPPLYING THE EQUIPMENT FOR THE PROPER STARTUP AND OPERATION OF ALL SYSTEMS INSTALLED. INSTRUCT THE OWNERS PERSONNEL IN THE PROPER OPERATION AND SERVICING OF THE SYSTEM.

2) THE CONTRACTOR SHALL GUARANTEE TO REPLACE OR REPAIR PROMPTLY AND ASSUME RESPONSIBILITY FOR ALL EXPENSES INCURRED FOR ANY WORKMANSHIP AND EQUIPMENT IN WHICH DEFECTS DEVELOP WITHIN THE GUARANTEE PERIOD. THIS WORK SHALL BE DONE AS DIRECTED BY THE OWNER. THIS GUARANTEE SHALL INCLUDE RESPONSIBILITY FOR ALL EXPENSES INCURRED IN REPAIRING AND REPLACING WORK OF OTHER TRADES AFFECTED BY DEFECTS, REPAIRS OR REPLACEMENTS IN EQUIPMENT SUPPLIED BY THIS CONTRACTOR.

3) THIS CONTRACTOR IS RESPONSIBLE FOR THE MAINTENANCE AND OPERATION OF ALL SYSTEMS UNTIL THE FINAL ACCEPTANCE OF THE WORK.

W. SPECIFICATIONS ARE OF SIMPLIFIED FORM AND INCLUDE INCOMPLETE SENTENCES. WORDS OR PHRASES SUCH AS "THE CONTRACTOR SHALL," "SHALL BE," "FURNISH," "PROVIDE," "A," "THE," AND "ALL" HAVE BEEN OMITTED FOR BREVITY.

X. DEFINITIONS:

1) "PROVIDE": TO SUPPLY, INSTALL AND CONNECT UP COMPLETE AND READY FOR SAFE AND REGULAR OPERATION THE PARTICULAR WORK REFERRED TO UNLESS SPECIFICALLY OTHERWISE NOTED.

2) "INSTALL": TO ERECT, MOUNT AND CONNECT COMPLETE WITH RELATED ACCESSORIES.

3) "FURNISH" OR "SUPPLY": TO PURCHASE, PROCURE, ACQUIRE AND DELIVER COMPLETE WITH RELATED ACCESSORIES.

4) "WORK": LABOR, MATERIALS, EQUIPMENT, APPARATUS, CONTROLS, ACCESSORIES AND OTHER ITEMS REQUIRED FOR PROPER AND COMPLETE INSTALLATION.

5) "CONCEALED": EMBEDDED IN MASONRY OR OTHER CONSTRUCTION, INSTALLED IN FURRED SPACES, WITHIN DOUBLE PARTITIONS OR HUNG CEILINGS, IN TRENCHES, IN CRAWL SPACES, OR IN ENCLOSURES.

6) "EXPOSED": NOT INSTALLED UNDERGROUND OR "CONCEALED" AS DEFINED ABOVE.

7) "SIMILAR" OR "EQUAL": EQUAL IN MATERIALS, WEIGHT, SIZE, DESIGN AND EFFICIENCY OF SPECIFIED PRODUCT.

2. SCOPE OF WORK

A. THE WORK UNDER CONTRACT INCLUDES ALL LABOR, MATERIALS AND APPLIANCES NECESSARY FOR THE FURNISHING, INSTALLING AND TESTING, COMPLETE AND READY FOR SAFE OPERATION OF THE SYSTEMS. WORK SHALL BE INSTALLED IN A NEAT, WORKMANLIKE MANNER.

B. MECHANICAL CONTRCATOR SHALL BE THE PRIME AND INCLUDE ALL OTHER TRADES AS REQUIRED TO COMPLETE THE WORK INCLUDING, BUT NOT LIMITED TO: TANK REMOVAL, SITEWORK, ELECTRICAL, PLUMBING, MASONRY AND GENERAL TRADES.

C. THE CONTRACTOR SHALL GIVE NECESSARY NOTICE, FILE DRAWINGS AND SPECIFICATIONS WITH THE DEPARTMENT HAVING JURISDICTION, OBTAIN PERMITS OR LICENSES NECESSARY TO CARRY OUT THIS WORK AND PAY ALL FEES THEREFORE. THE CONTRACTOR SHALL ARRANGE FOR INSPECTION AND TESTS OF ANY OR ALL PARTS OF THE WORK IF SO REQUIRED BY AUTHORITIES AND PAY ALL CHARGES FOR SAME. THE CONTRACTOR SHALL PAY ALL COSTS FOR, AND FURNISH TO THE OWNER BEFORE FINAL BILLING, ALL CERTIFICATES NECESSARY AS EVIDENCE THAT THE WORK INSTALLED CONFORMS WITH ALL REGULATIONS WHERE THEY APPLY TO THIS WORK.

D. THE CONTRACTOR SHALL FURNISH A WRITTEN GUARANTEE TO REPLACE OR REPAIR PROMPTLY AND ASSUME RESPONSIBILITY FOR ALL EXPENSES INCURRED FOR ANY WORKMANSHIP AND EQUIPMENT IN WHICH DEFECTS DEVELOP WITHIN ONE YEAR FROM THE DATE OF FINAL CERTIFICATE FOR PAYMENT AND/OR FROM DATE OR ACTUAL USE OF EQUIPMENT OR OCCUPANCY OF SPACES, BY OWNER, INCLUDED UNDER THE VARIOUS PARTS OF THE WORK, WHICHEVER DATE IS EARLIER. THIS WORK SHALL BE DONE AS DIRECTED BY THE OWNER. THIS GUARANTEE SHALL ALSO PROVIDE THAT WHERE DEFECTS OCCUR, THE CONTRACTOR WILL ASSUME RESPONSIBILITY FOR ALL EXPENSES INCURRED IN REPAIRING AND REPLACING WORK OF OTHER TRADES AFFECTED BY DEFECTS, REPAIRS OR REPLACEMENTS IN EQUIPMENT SUPPLIED BY THE CONTRACTOR.

E. PRIOR TO THE INSTALLATION OF ANY WORK AND PROCUREMENT OF EQUIPMENT PROVIDE COMPLETE SET OF COORDINATED SHOP DRAWINGS OF ALL NEW AND EXISTING EQUIPMENT, DUCTWORK, PIPING AND CONTROL SYSTEMS INDICATING CAPACITY DIMENSIONS AND SEQUENCE OF OPERATION FOR WRITTEN APPROVAL BY THE ARCHITECT AND ENGINEER.

F. WITHIN 15 DAYS AFTER AWARD OF CONTRACT, SUBMIT FOR REVIEW, A LIST OF ALL MATERIAL AND EQUIPMENT MANUFACTURER?S PRODUCTS THAT ARE PROPOSED, AS WELL AS NAMES OF ALL SUBCONTRACTORS WHOM THIS TRADE PROPOSES TO UTIRILIZE ON THIS PROJECT.

3. SHOP DRAWINGS

A. INDICATE ON EACH SUBMISSION: PROJECT NAME AND LOCATION, ARCHITECT AND ENGINEER, ITEM IDENTIFICATION AND APPROVAL STAMP OF PRIME CONTRACTOR, SUBCONTRACTOR NAMES AND PHONE NUMBERS, REFERENCE TO THE APPLICABLE DESIGN DRAWING OR SPECIFICATION ARTICLE, DATE AND SCALE.

B. THE WORK DESCRIBED IN ALL SHOP DRAWING SUBMISSION SHALL BE CAREFULLY CHECKED FOR ALL CLEARANCES (INCLUDING THOSE REQUIRED FOR MAINTENANCE AND SERVICING), FIELD CONDITIONS, MAINTENANCE OF ARCHITECTURAL CONDITIONS AND PROPER COORDINATION WITH ALL TRADES ON THE JOB.

C. ALL SHOP DRAWINGS ARE TO BE SUBMITTED TO ALLOW AMPLE TIME FOR CHECKING IN ADVANCE OF FIELD REQUIREMENTS. ALL SUBMITTALS TO BE COMPLETE AND CONTAIN ALL REQUIRED AND DETAILED INFORMATION. SHOP DRAWINGS WITH MULTIPLE PARTS SHALL BE SUBMITTED AS A PACKAGE.

D. ELECTRONIC COPIES OF AKF DRAWINGS:

1) UPON AWARD OF CONTRACT, CONTRACTOR SHALL SUBMIT LIST OF DRAWINGS THAT THEY WILL REQUIRE. AKF WILL PROVIDE DRAWINGS IN (.PDF) FORMAT ONLY.

2) IF THE CONTRACTOR REQUIRES (.DWG) FORMAT, THERE WILL BE A CHARGE OF $200 FOR EACH DRAWING SUPPLIED PLUS SHIPPING AND HANDLING FOR PREPARATION AND PROCESSING. AFTER PREPARATION THE DRAWINGS WILL BE FORWARDED ONLY UPON RECEIPT OF SIGNED ACCEPTANCE OF TERMS FORM.

3) THESE FILES ARE BEING ISSUED FOR THE CONVENIENCE OF THE CONTRACTOR AND THE CONTRACTOR REMAINS RESPONSIBLE FOR ALL CONTRACT REQUIREMENTS RELATED TO THE NORMAL SHOP DRAWING PREPARATION PROCESS.

E. SUBMISSIONS:

1) PROVIDE ALL COORDINATION DRAWINGS, DUCTWORK AND PIPING SHOP DRAWINGS IN AUTOCAD FORMAT, VERSION COMPATIBLE WITH OWNER. ALL CATALOG CUTS AND SUBMITTALS TO BE PROVIDED IN ELECTRONIC ?PDF? FORMAT.

2) IF PAPER SUBMISSIONS ARE TO BE PROVIDED THE FOLLOWING SHALL BE ADHERED TO.

A. SUBMISSIONS 11 INCH X 17 INCH OR SMALLER: IF THE SUBMISSION IS A CATALOG CUT, THEN THE CONTRACTOR SHALL SUBMIT ONE ORIGINAL AND ONE COPY. OTHERWISE, THEY SHALL SUBMIT TWO COPIES. THE ARCHITECT WILL FORWARD THE ORIGINAL AND ONE COPY (TWO COPIES WHEN NO ORIGINAL IS RECEIVED) TO THE ENGINEER. ALL CATALOG CUTS SHALL BE COMPLETE.

B. SUBMISSIONS LARGER THAN 11 INCH X 17 INCH: SUBMIT TWO COPIES TO THE ARCHITECT. THE ARCHITECT WILL FORWARD TO THE ENGINEER.

F. SUBMIT SHOP DRAWINGS FOR THE FOLLOWING:

1) FUEL OIL TANK, SPECIALTIES, AND LEAK/LEVEL/FILL CONTROLS.

2) PACKAGED FUEL OIL DUPLEX PUMP SET WITH CONTROLS.

3) DOUBLE WALL PIPING FOR BURIED INSTALLATIONS.

4) PIPING LAYOUT.

5) PIPING MATERIALS.

4. AS-BUILTS AND EQUIPMENT OPERATION INSTRUCTIONS

A. PROVIDE ALL COORDINATION DRAWINGS, DUCTWORK AND PIPING SHOP DRAWINGS IN AUTOCAD FORMAT, VERSION COMPATIBLE WITH OWNER. ALL CATALOG CUTS AND SUBMITTALS TO BE PROVIDED IN ELECTRONIC "PDF" FORMAT THE ARCHITECT WILL FORWARD ALL SUBMISSIONS TO THE ENGINEER.

B. ON COMPLETION AND ACCEPTANCE OF WORK, THIS CONTRACTOR SHALL FURNISH WRITTEN INSTRUCTIONS, EQUIPMENT MANUALS AND DEMONSTRATE TO THE OWNER THE PROPER OPERATION AND MAINTENANCE OF ALL EQUIPMENT AND APPARATUS FURNISHED UNDER THIS CONTRACT.

C. THESE INSTRUCTIONS SHALL BE TYPED ON 8-1/2 INCH X 11 IN FORMAT. THE CONTRACTOR SHALL GIVE ONE COPY OF THE INSTRUCTIONS TO THE OWNER AND ONE COPY TO THE ENGINEER.

D. THE INSTRUCTIONS SHALL BE ORGANIZED IN SECTIONS, WITH ONE SECTION PER SYSTEM. THE COVER OF THE INSTRUCTION BOOKLET SHALL BEAR THE NAME, ADDRESS AND PHONE NUMBER OF THE PROJECT, ARCHITECT, ENGINEER, MECHANICAL CONTRACTOR AND SUBCONTRACTORS.

E. FINAL "AS-BUILT" DRAWINGS INDICATING AS INSTALLED CONDITIONS SHALL BE PROVIDED TO THE ARCHITECT AND ENGINEER AFTER COMPLETION OF THE INSTALLATION.

5. SUBSTITUTIONS

A. CONTRACTOR SHALL SUBMIT BID BASED ON SPECIFIED ITEMS AND SHALL SUPPLY AS AN ALTERNATE PRICE ANY SUBSTITUTIONS.

6. PIPING - GENERAL REQUIREMENTS

A. COMPLETE WITH: PIPE, FITTINGS, VALVES, STRAINERS, MOTORIZED VALVE OPERATORS, STRAINERS, HANGERS, SUPPORTS, GUIDE, SLEEVES, AND ACCESSORIES.

B. ALL ITEMS SHALL BE FURNISHED AND INSTALLED IN ACCORDANCE WITH THE LATEST EDITIONS OF THE FOLLOWING CODES AND STANDARDS:

1) AMERICAN SOCIETY OF MECHANICAL ENGINEERS (ASME).

2) AMERICAN SOCIETY FOR TESTING AND MATERIALS (ASTM).

3) AMERICAN NATIONAL STANDARDS INSTITUTE (ANSI).

4) MANUFACTURERS STANDARDIZATION SOCIETY OF THE VALVE AND FITTING INDUSTRY (MSS).

C. GASKETS: ONE PIECE RING TYPE 1/16 INCH MINIMUM THICKNESS KLINGER C4400 OR APPROVED EQUAL.

D. COPPER TUBE BRAZING

1) ALL BRAZING SHALL BE DONE IN ACCORDANCE WITH ALL CODES APPLICABLE TO THE PARTICULAR SERVICE. BRAZING FILLER METALS: AWS A5.8, BCUP SERIES, COPPER-PHOSPHORUS ALLOYS FOR JOINING COPPER WITH COPPER.

2) QUALIFY PROCESS AND OPERATORS IN ACCORDANCE WITH ASME BOILER AND PRESSURE VESSEL CODE, SECTION IX, ?WELDING AND BRAZING QUALIFICATIONS?.

E. ALL PRESSURIZED PIPING TO BE TESTED HYDROSTATICALLY TO 150 PSI OR 150% OF OPERATING PRESSURE, WHICHEVER IS GREATER, BUT NEVER EXCEED TEST PRESSURE ANSI B16.1 BASIS. TEST DURATION TO BE 2 HOURS WITH NO PRESSURE CHANGE CORRECTED FOR TEMPERATURE CHANGE. REPAIR OR REPLACE LEAKS OR DEFECTS WITHOUT ADDITIONAL COST.

F. PIPE SUPPORTS:

1) PROVIDE ADEQUATE SUPPORT FOR PIPE AND CONTENTS TO PREVENT SAGGING, VIBRATION, OR SWAYING AND ALLOW FOR EXPANSION AND CONTRACTION. PROVIDE SUPPLEMENTAL STEEL AS REQUIRED WHERE STRUCTURE CANNOT SUPPORT POINT LOADS.

2) HORIZONTAL PIPING TO BE SUPPORTED BY FORGED STEEL ADJUSTABLE CLEVIS TYPE HANGER. MAXIMUM SPACING AS FOLLOWS:

A. COPPER 1 INCH AND SMALLER: 5 FEET.

B. COPPER 1-1/2 IN to 2-1/2 INCH: 8 FEET.

3) ROD SIZE

A. PIPE 2 IN AND SMALLER: 3/8 IN

G. VALVES - GENERAL REQUIREMENTS

1) VALVE PRESSURE AND TEMPERATURE RATINGS: NOT LESS THAN INDICATED AND AS REQUIRED FOR SYSTEM PRESSURES AND TEMPERATURES.

2) VALVE SIZES: SAME AS UPSTREAM PIPING UNLESS OTHERWISE INDICATED.

3) VALVE-END CONNECTIONS:

A. SOLDER JOINT: WITH SOCKETS ACCORDING TO ASME B16.18.

B. THREADED: WITH THREADS ACCORDING TO ASME B1.20.1.

4) GENERAL-DUTY VALVE APPLICATIONS: UNLESS OTHERWISE INDICATED, USE THE FOLLOWING VALVE TYPES:

A. SHUTOFF SERVICE: BALL, BUTTERFLY OR GATE VALVES.

7. FUEL OIL SYSTEMS.

A. FUEL OIL SUPPLY AND RETURN; MATERIAL SHALL BE COPPER.

1) POLYETHYLENE COATED TYPE ACR COPPER

B. VENT AND FILL LINES:

1) SCHEDULE 40 STEEL WITH MALLEABLE STEEL FITTINGS

8. ELECTRICAL WORK

A. GENERAL:

1) ELECTRICAL POWER WIRING FOR HVAC EQUIPMENT SHALL BE PROVIDED UNDER THE HVAC CONTRACT. THIS CONTRACTOR SHALL HIRE AN ELECTRICAL SUBCONTRACTOR IF NECESSARY.

2) CONTROL WIRING SHALL BE PROVIDED BY THE HVAC CONTRACT. CONTROL WIRING SHALL BE DEFINED AS ANY WIRING 120V AND BELOW INSTALLED FOR PURPOSES OTHER THAN PROVIDING PRIMARY ELECTRICAL POWER TO EQUIPMENT.

2) MOTOR STARTERS SHALL BE FURNISHED BY THE HVAC CONTRACTOR AND INSTALLED BY THE ELECTRICAL CONTRACTOR.

3) ALL ELECTRICAL CONTROL WIRING SHALL COMPLY WITH LOCAL ELECTRICAL CODE, ALL AUTHORITIES HAVING JURISDICTION AND THE PROJECT ELECTRICAL SPECIFICATIONS.

4) MECHANICAL CONTRACTOR TO OBTAIN QUANTITY OF CONTROLLERS REQUIRED AND COORDINATE WITH ELECTRICAL CONTRACTOR FOR ALL OPERATING REQUIREMENTS, INTERLOCKS AND CONNECTIONS FOR STARTERS.

9. MOTORS:

A. MOTORS SHALL HAVE THE ELECTRICAL CHARACTERISTICS AS LISTED ON THE DRAWINGS. COORDINATE ALL REQUIREMENTS WITH ELECTRICAL CONTRACTOR. ALL MOTORS SHALL COMPLY WITH NEMA MG-1 STANDARD AND SHALL BE OF THE HIGH EFFICIENCY TYPE AND MEET THE 1992 EPA ENERGY EFFICIENCY ACT AND UTILITY COMPANY REBATE REQUIREMENTS.

B. IF CONTRACTOR ELECTS TO SUBSTITUTE OR INCREASE MOTOR HORSEPOWER OVER THAT SPECIFIED, THE COST OF MOTOR AND ELECTRICAL CHANGES SHALL BE BORNE BY THIS CONTRACTOR.

C. MOTORS (UNDER HVAC WORK): IN ACCORDANCE WITH NEMA, IEEE AND ANSI C50 STANDARDS:

1) PREMIUM EFFICIENCY UNLESS OTHERWISE NOTED.

2) 1.15 SERVICE FACTOR INCLUDING MOTORS SERVED FROM A VFD

3) SQUIRREL CAGE INDUCTION, OPEN DRIPPROOF TYPE, 1750 RPM, NEMA TYPE B INSULATION CLASS, CONTINUOUS DUTY, EXCEPT AS NOTED.

10. MOTOR CONTROLLERS

A. SUPPLIED BY HVAC CONTRACTOR AND INSTALLED AND WIRED BY ELECTRICAL CONTRACTOR.

B. ENCLOSURES:

1) PROVIDE ENCLOSURES FOR STARTERS AND VFD?S SUITABLE FOR OPERATING ENVIRONMENT. ENCLOSURE?S SHALL BE NEMA 1 VENTILATED SHEETMETAL FOR INDOOR APPLICATION, NEMA 3R WITH ADDITIONAL GASKETING WEATHER-PROOF RAINTIGHT ENCLOSURE FOR EXPOSED OUTDOOR SERVICE OR INDOOR SERVICE EXPOSED TO MOISTURE.PROVIDE DISCONNECT SWITCH ON ENCLOSURE AS REQUIRED FOR SERVICE.

C. WITH SOLID-STATE (ELECTRONIC) OVERLOAD PROTECTION. COORDINATE ALL MOTOR CONTROLLER TYPES AND SIZES WITH MOTOR TYPES AND SIZES.

D. 1/3 HP AND SMALLER: PROVIDE MANUAL STARTER EXCEPT USE MAGNETIC TYPE WHERE AUTOMATICALLY CONTROLLED.

1) MANUAL TYPE: 2-POLE TOGGLE SWITCH WITH OVERLOAD PROTECTION AND PILOT LIGHT.

E. 1/2 HP AND LARGER: PROVIDE MAGNETIC STARTER:

1) COMBINATION UNFUSED DISCONNECT SWITCH AND MAGNETIC STARTER EXCEPT AS NOTED.

2) HOA SELECTOR SWITCH FOR AUTOMATICALLY OPERATED MOTORS. SAFETY CONTROLS COMMON TO BOTH CONTROLS.

3) RED, GREEN AND AMBER PILOT LIGHTS.

4) SWITCHES: HORSE-POWER-RATED, EXTERNAL PADLOCKING TYPE.

5) HOLDING COILS: 10 WATT, 120 VOLT.

6) CONTACTS: MAIN LINE AND MINIMUM (2) - NORMALLY OPEN, (2) - NORMALLY CLOSED 10 AMP AUXILIARIES, IN ADDITION TO CONTACTS

7) REQUIRED FOR CONTROLS SPECIFIED.

8) CONTROL TRANSFORMER: FOR MOTORS OVER 120 VOLTS, TO STEP DOWN CONTROL VOLTAGE TO 120 VOLTS; OF THE REQUIRED CAPACITY WITH FUSE AND GROUND CONNECTION ON VOLTAGE SIDE.

9) FUSES: SIMILAR TO BUSSMAN.

10) RELAYS: TO SUPPLEMENT AUXILIARY CONTACTS IN CONTROLLER. MINIMUM 10 WATT COIL AND TWO 10 AMP CONTACTS.

11) TERMINALS: SUITABLE FOR CONDUCTORS NOTED AND AS APPROVED.

11. EQUIPMENT

A. PROVIDE ALL EQUIPMENT AND ACCESSORIES OF THE SIZES AND CAPACITIES AS SCHEDULED AND AS INDICATED ON THE DRAWINGS.

B. INSTALL EQUIPMENT IN ACCORDANCE WITH APPROVED SHOP DRAWINGS, MANUFACTURERS INSTRUCTIONS AND ALL CODES AND REGULATIONS WHICH APPLY.

C. PROVIDE EQUIPMENT SUPPORTS AND/OR MOUNTINGS AS INDICATED ON THE DRAWING, IN VIBRATION SPECIFICATION AND AS FOLLOWS:

1) CEILING MOUNTED EQUIPMENT - PROVIDE SUPPORTS WITH APPROVED SUITABLE ANCHORS SUSPENDED DIRECTLY FROM BUILDING STEEL STRUCTURE.

2) PROVIDE SUPPLEMENTAL STEEL AS REQUIRED TO ADEQUATELY SUPPORT THE EQUIPMENT LOAD.

3) EQUIPMENT SHALL BE INSTALLED WITH VIBRATION ISOLATION, REFER TO VIBRATION ISOLATION SECTION.

D. UNDERGROUND DOUBLE-WALL FUEL OIL STORAGE TANK:

1) DOUBLE-WALL TYPE I CONSTRUCTION, U.L.58, STEEL STORAGE TANK.

2) THE TANK SHALL INCLUDE:
A. 36 INCH DIA. MANHOLE WITH NUTS AND BOLTS AND GASKET FOR LID.

B. INTERNAL LADDER WITH 2"X 1/4" FLAT BAR SIDES AND 3/4" DIAMETER RUNGS 12" ON CENTER.

C. TWO POLYESTER HOLD DOWN STRAPS WITH NEOPRENE LINER AND TURNBUCKLES (2 PER STRAP).

D. SIX 4INCH DIA. THREADED NPT FITTINGS.

E. POLYURETHANE COATING SYSTEM (75 MILS DFT HEAD & SHELL).

F. TWO CONCRETE DEADMAN ANCHORS.

G. 36 INCH DIA. GRADE LEVEL MANWAY, H-20 LOAD RATED.

H. TEN YEAR LIMITED WARRANTY.

I. POLYURETHANE TOUCH-UP KIT FOR REPAIR OF COATING DAMAGE DUE TO HANDLING.

3) TANK MONITORING SYSTEM:

A. AUTOMATIC, CONTINUOUS REMOTE MONITORING OF TANK INTERSTITIAL SPACE AND SUMP. WARNINGS AND ALARMS FOR FUEL PRESENCE, LOW LIQUID AND HIGH LIQUID.

B. READOUT OF FUEL OIL LEVEL.

C. HIGH FILL LEVEL ALARM WITH REMOTE AUDIBLE AND VISUAL EXTERNAL ALARM.

D. IN-TANK WARNINGS AND ALARMS FOR LEAK, OVERFILL, LOW PRODUCT, SUDDEN LOSS, HIGH WATER, DELIVERY NEEDED, TEST FAILURE AND TANK TEST NOT PERFORMED.

E. RS-232 COMMUNICATION INTERFACE TO EXTERNAL COMPUTER.

F. VEEDER ROOT TLS-300i OR ENGINEER APPROVED EQUAL.

4) OVERFILL SUMP:

A. STEEL TUB WITH PIPED CONNECTION TO TANK TO CAPTURE SPILLED OIL.

5) TANK SHALL BE INSTALLED IN STRICT CONFORMANCE WITH MANUFATURER'S RECOMMENDATIONS INCLUDING PREPARATION OF EXCAVATION, BACKFILLING MATERIALS, SUPPORT, ANCHORAGE AND TESTING.

E. ABOVE-GROUND DOUBLE-WALL FUEL OIL STORAGE TANK (ALTERNATE #M3):

1) DOUBLE-WALL VAULT TYPE CONSTRUCTION, U.L.2085, STEEL STORAGE TANK.

2) THE TANK SHALL INCLUDE:
A. 2 HOUR FIRE RATING PER NFPA 30 AND 30A.

B. 4" THICK LIGHTWEIGHT CONCRETE SURROUNDING THE PRIMARY TANK WITH LEAK DETECTION.

C. STEEL ANCHORING TIE-DOWNS WELDED TO BOTTOM OF TANK MEETING ZONE 4 SEISMIC REQUIREMENTS.

D. ALL PORTS ON TOP WITH THREADED NPT FITTINGS.

E. 3/16" THICK SECONDARY TANK COATED WITH INDUSTRIAL PAINT.

F. PRIMARY TANK CONSTRUCTED OF ASTM A-569 OR A-36 CARBON STEEL IN ACCORDANCE WITH UL 142 STANDARDS 1/4" THICK..

G. ALL WELDS CONTINUOUS. PRIMARY AND SECONDARY TANKS FIELD TESTED TO 3 PSI.

H. TWENTY YEAR CORROSION WARRANTY.

I. REMOTE FILL BOX WELDED TO TO TANK WITH 3" FILL PIPE.

3) TANK MONITORING SYSTEM:

A. SAME AS BASE PRICE BURIED TANK.

12. AUTOMATIC CONTROLS - GENERAL REQUIREMENTS

A. WORK INCLUDED

1) FURNISH AND INSTALL AS HEREIN SPECIFIED, A COMPLETE AUTOMATIC CONTROL SYSTEM. INCLUDE ALL RELAYS, SWITCHES, ACTUATORS, CONTROLLERS, ETC. AS NEEDED.

2) PROVIDE A SUBMITTAL THAT MEETS THE REQUIREMENTS BELOW FOR APPROVAL.

3) PROVIDE POWER FOR PANELS AND CONTROL DEVICES FROM A SOURCE DESIGNATED BY THE ELECTRICAL CONTRACTOR.

4) COORDINATE INSTALLATION SCHEDULE WITH THE MECHANICAL CONTRACTOR AND GENERAL CONTRACTOR.

5) FURNISH, MOUNT, AND WIRE ALL ASSOCIATED PANELS AND DEVICES FOR THE SYSTEM TO BE COMPLETELY OPERATIONAL REGARDLESS OF FUNCTION OR VOLTAGE, UNLESS OTHERWISE STATED.

B. QUALITY ASSURANCE

1) COMPLY WITH ALL CURRENT GOVERNING CODES,